WALTERSCHEID

| | | | | | | | |
|---|---|---|---|---|---|---|---|
| Gelenkwelle<br>PTO drive shaft<br>Transmission | W2400-265 | Bestell-Nr.<br>Part No.<br>Référence | 108025 | Zeichnungs-Nr.<br>Drawing No.<br>Réf. du plan | 14188 | Datum<br>Date<br>Date | 30.05.96 |

| | | | | | | | |
|---|---|---|---|---|---|---|---|
| für Kunde<br>for customer<br>pour client | Kemper | Kundenzeichnungs-Nr.<br>Customer drawing No.<br>Réf. du plan client | 69 888 | Maschinenart<br>Machine<br>Machine | Häcksler | Type<br>Type<br>Type | M 6000 |

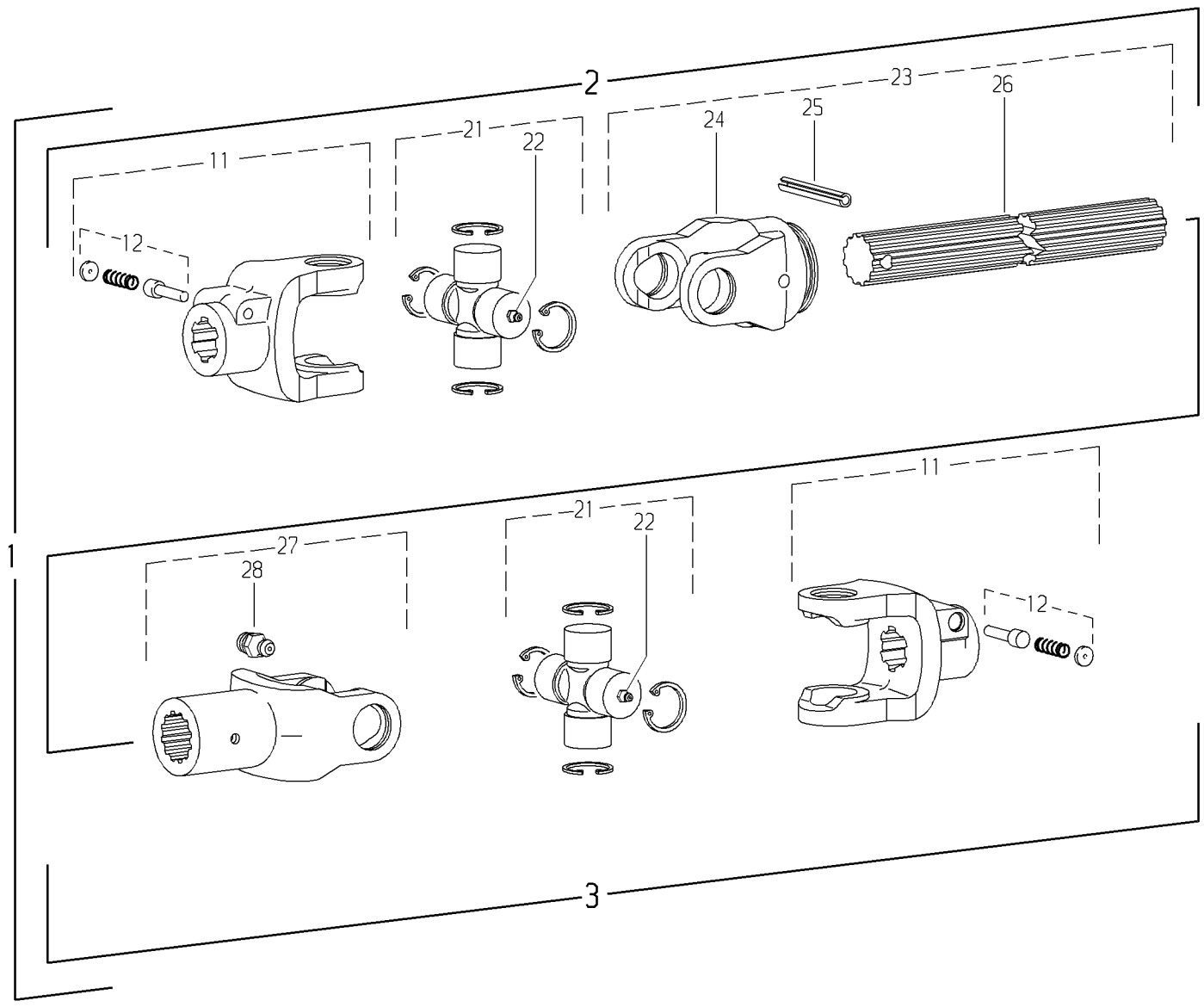


| Pos.-Nr.<br>Item<br>Repère | Bestell-Nr.<br>Part No.<br>Référence | Zeichnungs-Nr.<br>Drawing No.<br>Réf. du Plan | Stückzahl<br>Quantity<br>Quantité | Technische Angaben<br>Technical data<br>Données techniques | Benennung | Description | Désignation | |
|---|---|---|---|---|---|---|---|---|
| 1 | 108025 | 14188 | 1 | W2400-265 | Gelenkwelle | PTO drive shaft | Transmission | |
| 2 | 107946 | | 1 | WH2400-236 | Innere Gelenkwellenhälfte | Inner PTO drive shaft half | Demi-transmission interieure | |
| 3 | 103583 | | 1 | G2400 | Gelenk | Single joint | Joint simple | |
| | | | | | | | | |
| | | | | | | | | |
| | | | | | | | | |
| 11 | 103581 | +35.79.101 | 2 | AG2400-1 3/8" (21) | Aufsteckgabel mit Schiebestift | Quick-disconnect yoke | Machoire a verouillage rapide | |
| 12 | 339107 | agraset 101 | 2 | | Schiebestift kpl. | Quick-disconnect pin cpl. | Poussoir de verrouillage rapide cpl. | |
| / | | | | | | | | |
| 21 | 188105 | 35.00.111 | 2 | | Kreuzgarnitur komplett | Cross and bearing kit complete | Bloc croisillon complet | |
| 22 | 020671 | 63.11.01 | 2 | DIN71412-AM6 | Kegel-Schmiernippel | Lubrication fitting | Graisseur | |
| 23 | 110446 | 35.70.106 | 1 | WELG2400-40x36(20)H-236 | Wellengabel komplett | Shaft and yoke assembly | Machoire avec profile complete | |
| 24 | 192364 | +35.70.103 | 1 | RG2400-40x36(20) | Rillengabel | Inboard yoke | Machoire a gorge | |
| 25 | 020613 | 61.05.05 | 1 | DIN1481-10x60 | Spannstift | Spring type straight pin | Goupille elastique | |
| 26 | 107516 | 67.76.02 | 1 | 40x36(20)H-195 | Profilwelle | Profile shaft | Arbre profile | |
| 27 | 103802 | 35.24.140 | 1 | NG2400-40x36(20) | Nabengabel komplett | Hub yoke complete | Machoire alesee complete | |
| 28 | 020672 | 63.12.01 | 1 | DIN71412-AM8x1 | Kegel-Schmiernippel | Lubrication fitting | Graisseur | |